FRONT SEAT ASSEMBLY (for LH Side)

COMPONENTS

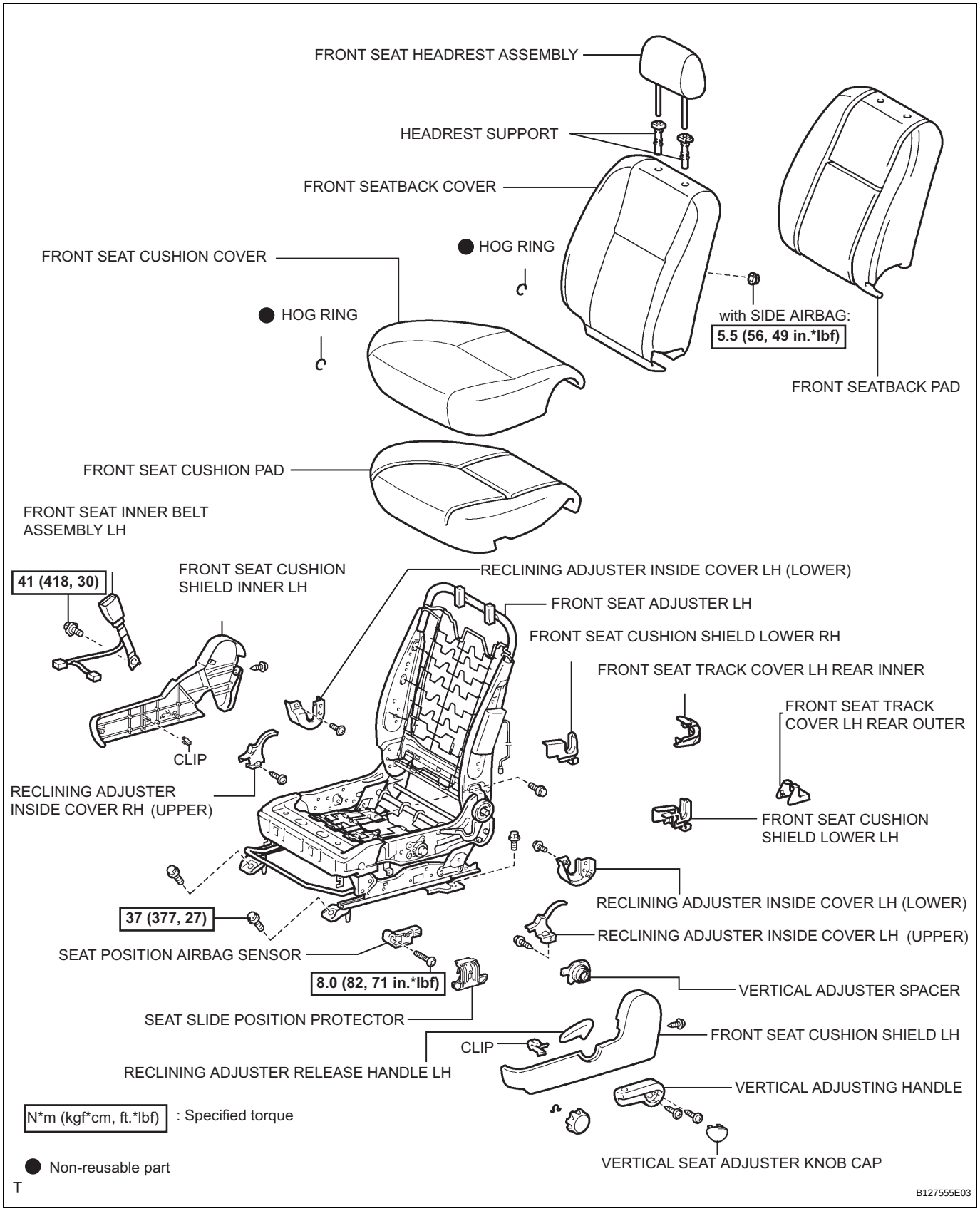

SE

REMOVAL

HINT:
A bolt without a torque specification is shown in the standard bolt chart.

NOTICE:
Wear protective gloves. Sharp areas on the seat adjuster can cause injuries to your hands.

1. **DISCONNECT CABLE FROM NEGATIVE BATTERY TERMINAL**
   NOTICE:
   Work must be started at least 90 seconds after the ignition switch is turned OFF and the negative (-) terminal cable is disconnected from the battery. (The SRS is equipped with a back-up power source. If work is started within 90 seconds after turning the ignition switch OFF and disconnecting the negative (-) terminal cable of the battery, the SRS may deploy.)

2. **REMOVE FRONT SEAT TRACK BRACKET COVER OUTER LH**

3. **REMOVE FRONT SEAT TRACK BRACKET COVER INNER LH**

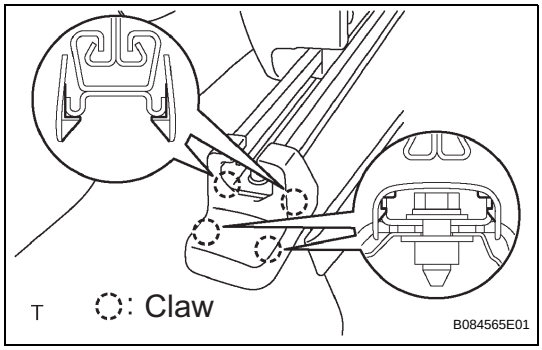

4. **REMOVE FRONT SEAT TRACK COVER LH REAR OUTER**
   (a) Move the front seat assembly fully forward by operating the slide handle.
   (b) Using a screwdriver, disengage the 4 claws and remove the cover.
   HINT:
   Tape the screwdriver tip before use.

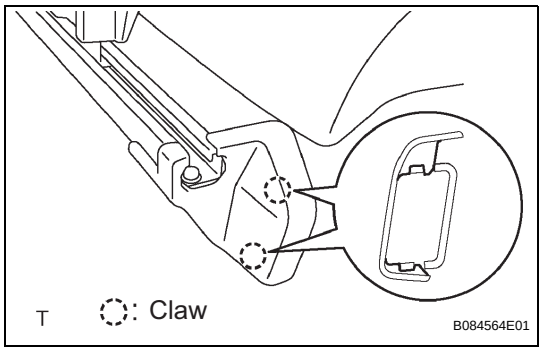

5. **REMOVE FRONT SEAT TRACK COVER LH REAR INNER**
   (a) Using a screwdriver, disengage the 2 claws and remove the cover.
   HINT:
   Tape the screwdriver tip before use.

6. **REMOVE FRONT SEAT HEADREST ASSEMBLY**

7. **REMOVE FRONT SEAT ASSEMBLY LH**
   (a) Lift up the seat track adjusting handle and move the seat to the rearmost position.
   (b) Remove the 2 bolts on the front side of the seat.
   (c) Lift up the seat track adjusting handle and move the seat to the frontmost position.
   (d) Remove the 2 bolts on the rear side of the seat.
   (e) Disconnect the connectors under the seat. Then remove the front seat.
   NOTICE:
   Be careful not to damage the vehicle body.